shr461CXGE

102 Megapixel Color Area Scan Camera with 10GigE Interface

The AVT shr461CXGE is a large-format area scan camera built on the 101.8 megapixel Sony IMX461 CMOS sensor, designed for applications where extremely high resolution and image quality are essential. The 43.8 × 32.87 mm Type 3.4 sensor with 3.76 µm pixels resolves 11,648 × 8,742 pixels in a single capture at up to 8.7 fps. A standard RJ-45 10GigE interface under GigE Vision 2.0 transmits image data over existing network infrastructure, with Power over Ethernet available in the -P option. On-board shading correction, flat field correction, LUT and defect pixel correction deliver 81.3 dB dynamic range and 46.8 dB SNR for electronics inspection, flat panel inspection, metrology and digitization.



RESOLUTION	FRAME RATE	INTERFACE	SENSOR
102 MP	8.7 fps	10 GigE	Sony IMX461
11,648 x 8,742	Full Resolution	RJ-45 GigE Vision 2.0	Type 3.4 CMOS

Vision Systems Technology • North American AVT Distributor • San Diego, California
TEL (858) 449-1562 • SALES sales@visionsystech.com • WEB www.visionsystech.com

858.449.1562

Main Features

- 101.8 MP Sony IMX461 Type 3.4 CMOS sensor
- 10GigE (RJ-45) interface, GigE Vision 2.0
- Power over Ethernet, PoE+ (option -P)
- 81.3 dB dynamic range, 46.8 dB SNR
- 8.7 fps at full resolution
- Borofloat B270i AR-coated protection glass
- LUT, mirror image, DPC, shading correction, FFC
- Sequencer, user sets and 4 × PWM control

Applications

- Electronics Inspection
- Flat Panel Display Inspection
- Metrology
- Document / Film Digitization
- Aerial and Large Area Imaging

Specifications

Model	shr461CXGE
Product Code	F004108
Resolution (H x V)	11,648 x 8,742
Sensor	Sony IMX461, CMOS, Area Scan, Color
Sensor Size (Diagonal)	43.80 mm x 32.87 mm (54.76 mm) Type 3.4
Pixel Size	3.76 µm x 3.76 µm
Interface	10GigE (RJ-45), GigE Vision 2.0
Max Frame Rate	8.7 fps at full resolution
Exposure Time	60 µs - 60 s
Pixel Data Format	Bayer 8/12/16 bit
Electronic Shutter	Rolling Shutter
Spectral Range	400 nm - 1000 nm, Borofloat B270i AR coating
Trigger Synchronization	Internal, Software, External
Dynamic Range / SNR	81.3 dB / 46.8 dB
Gain Control	0.0 dB - 36.0 dB, auto or manual
Image Control	LUT, mirror image, DPC, shading correction, FFC
Digital I/O	2 x 24 V input, 4 x open drain output, 1 x opto-isolated input, RS232 in / out
Dimension / Weight	83 mm x 80 mm x 80 mm, 580 g - IP30
Temperature	Operating (housing) -10° C - 65° C
Lens Mount	M72 x 0.75 mm
Power	External 10 - 25 VDC; PoE+ (optoin -P) Typ 17.0 W

Mechanical Dimensions

Front, right side, back and cross section views · 4 × M4 – 6H mounting threads on front, top and both sides

Unit: mm

front

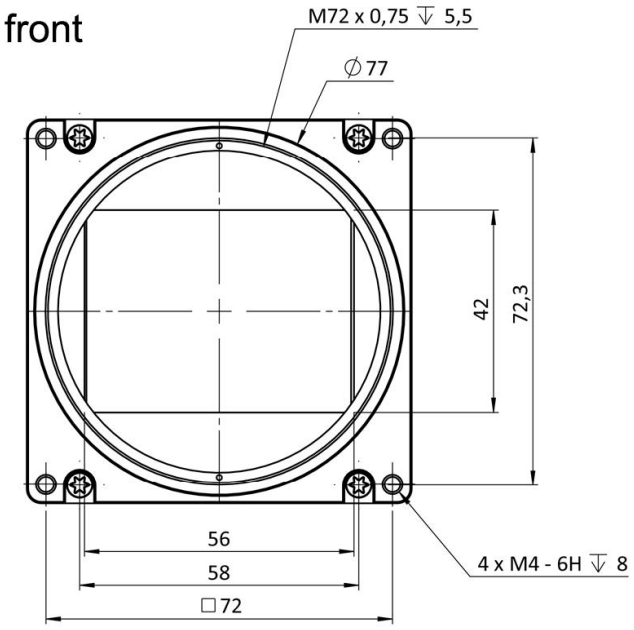

right side

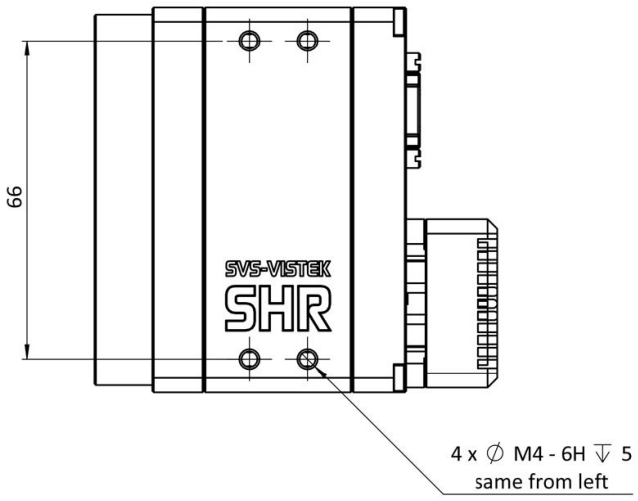

back

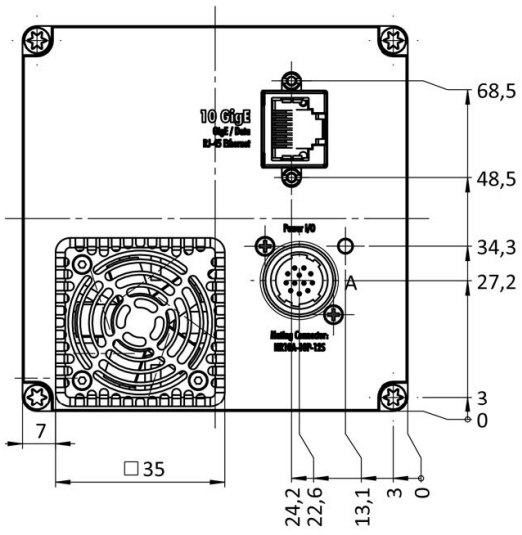

cross section

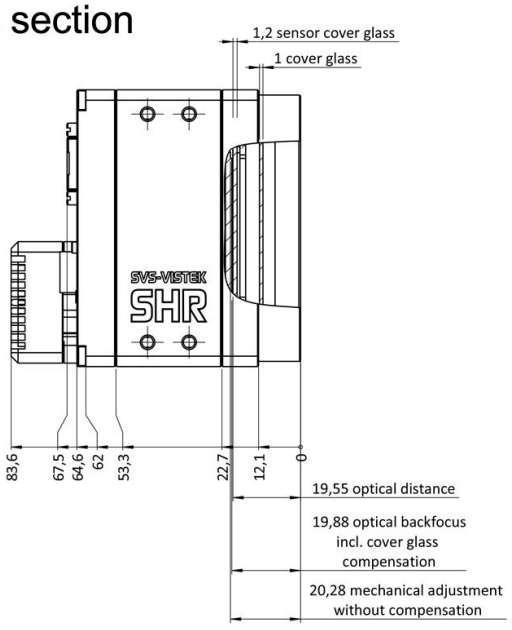

Housing 83 × 80 × 80 mm. Optical distance 19.55 mm. Lens mount M72 × 0.75 mm. Weight 580 g. IP30.

Spectral Response

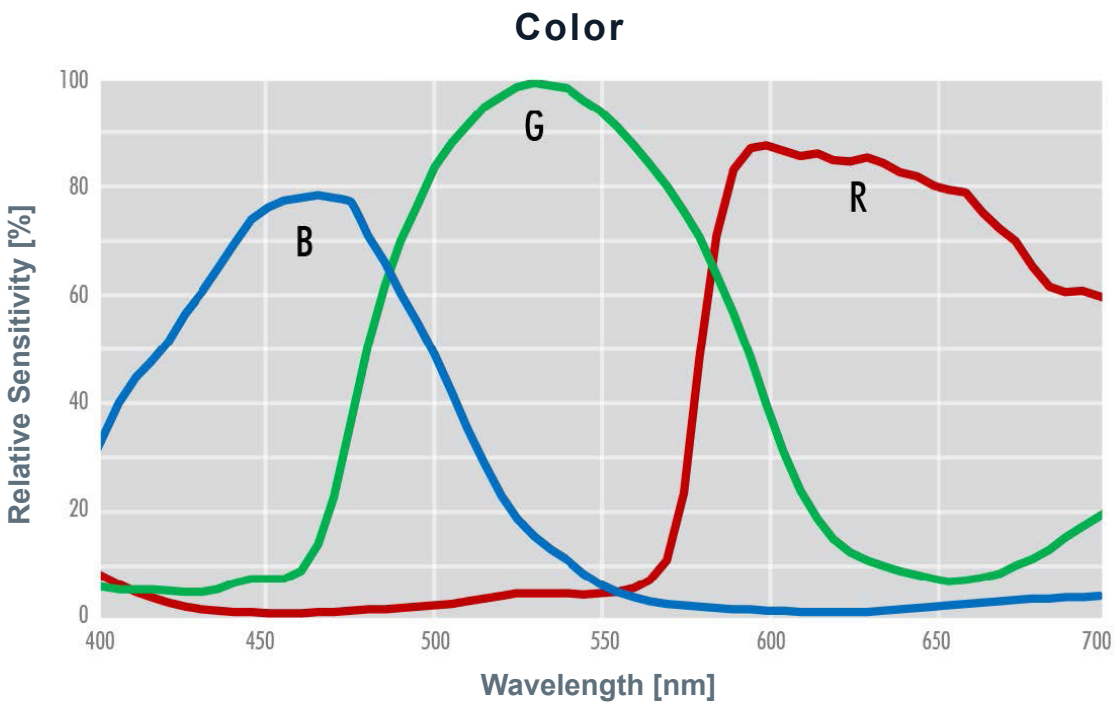

* Typical values for the sensor without lens or illumination; actual system response depends on optics, filters and light source.

Connector Specification

Power / Digital I/O

- 2 × 24 V input, 4 × open drain output
- 1 × opto-isolated input, RS232 in / out
- 10 – 25 VDC, typ. 17.0 W
- (12-pin Hirose HR10A-10P-12S)

Data Transfer / Communications

- 10GigE, RJ-45
- PoE+ powered on the -P option
- (Connectors on camera rear)

I/O Pin Assignment — 12-pin Hirose HR10A-10P-12S

Hirose 12 Pin

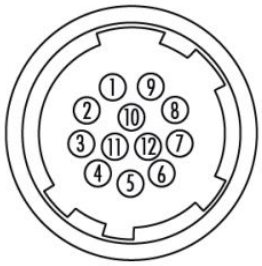

01	VIN-	(GND)	**07**	OUT1	(open drain)
02	VIN+	(10V to 25V DC)	**08**	OUT2	(open drain)
03	IN4	(RXD RS232)	**09**	IN3+	(opto In +)
04	OUT4	(TXD RS232)	**10**	IN3-	(opto In -)
05	IN1	(0-24V)	**11**	OUT3	(open drain)
06	IN2	(0-24V)	**12**	OUT0	(open drain)